View with VX hinge

always specity the hinge type when ordering!

Side view — Section E-E

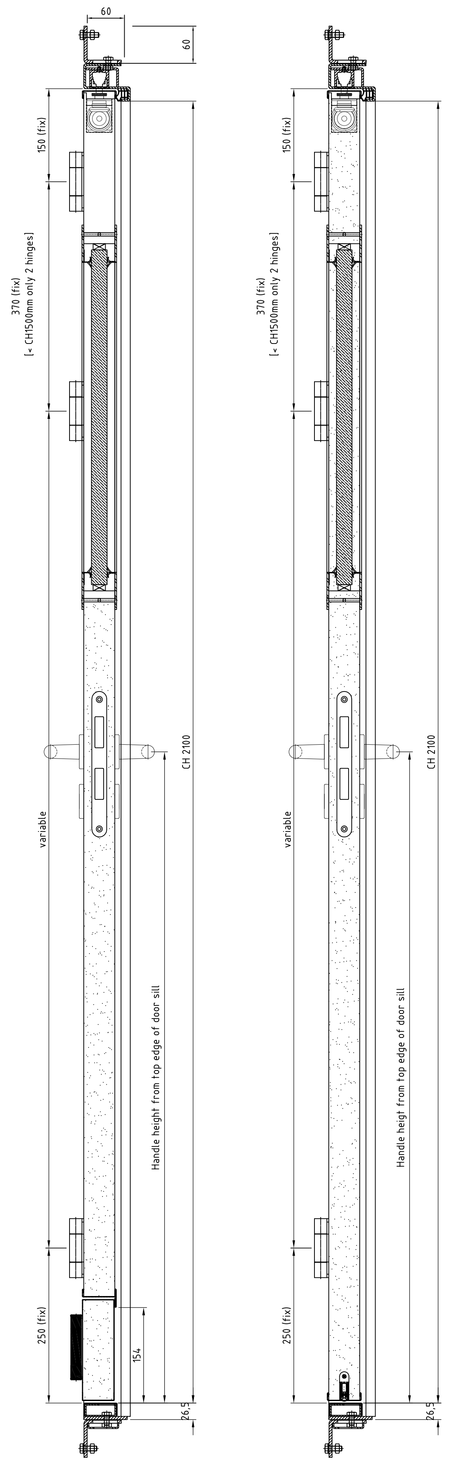

View

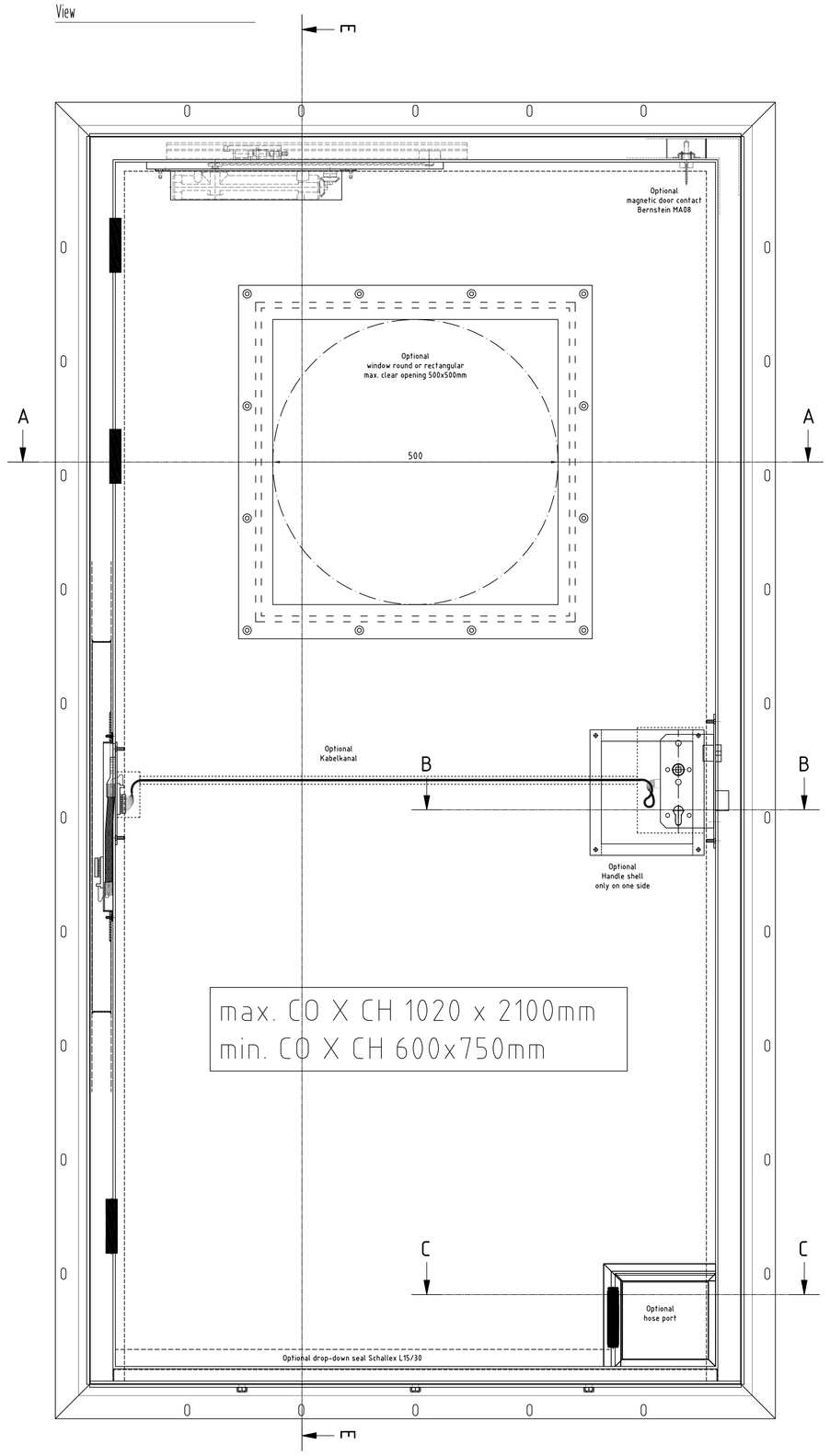

Please observe the following rules for the spacing of the hinge VX7729 & VX7748		
Clear height (CH)	>750 - 1500mm	>1500-max
Position hinge 1	150mm	150mm
Position hinge 2	not applicable	370mm
Distance between the door hinges	variable	variable
Distance hinge 3	250mm (from the top of the door sill)	250mm (from the top of the door sill)
	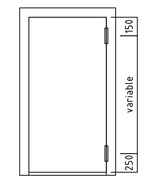	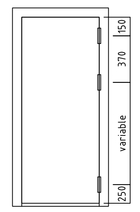

Top view — Detail edge frame

Varianten des Einfassrahmens

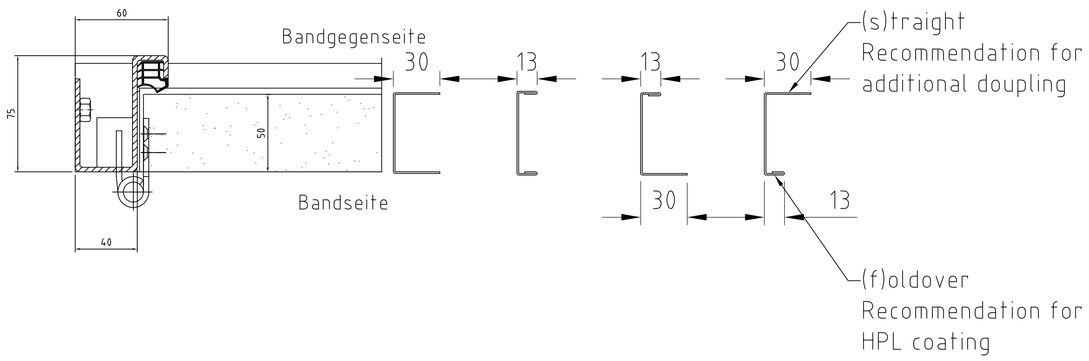

Silltype A/B/C

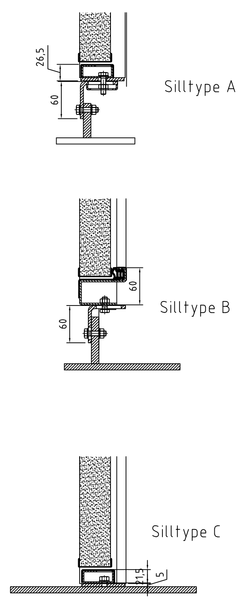

Top View — SectionA-A

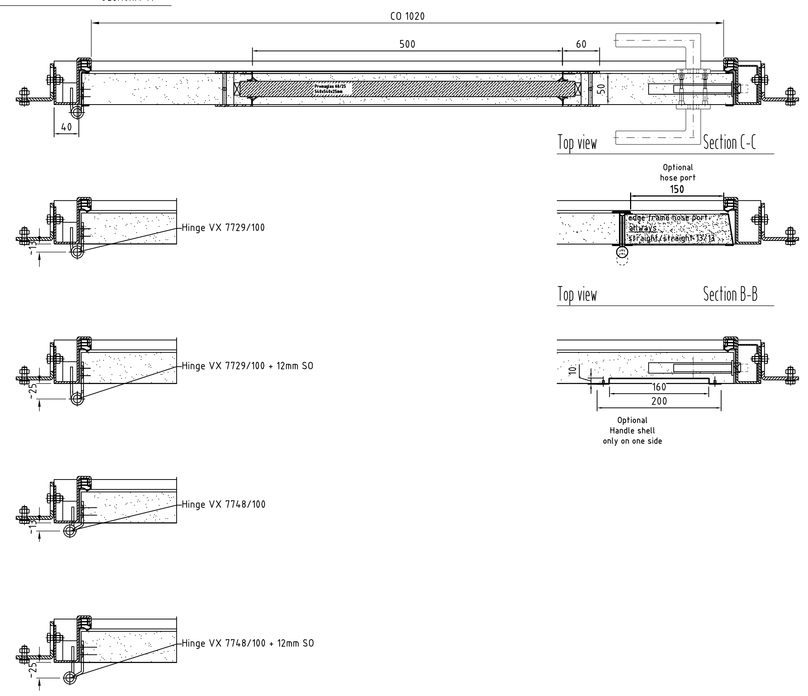

Top view — Section C-C

Top view — Section B-B

All dimensions must be checked on the workpiece.

Please note that...:

- ...Noise reduction values for all systems were measured under test conditions, Final values depending on room and installation conditions
- ...further design and technical details to be informed before start of production
- ...the production process requires a list with all relevant product properties
- ...price and amount of items might be modified after receiving further information
- ...installation or coordination drawings are not part of the offer
- ...handle and cylinder are not covered by this offer
- ...manufacturing aberrations from specified colour types could appear due to material background or charge reasons and are no claim reason
- ...weights attached to the described products shall not exceed a maximum weight of 30kg/leaf. For doors according SOLAS regulations the max. weight is limited depending on the CO dimension to 5kg (CO: 1020mm) - 20kg (CO: 800mm)
- clear opening (dimension in door frame, reduction by opened door not taken into account) with a maximum of COxCH 1020x2100mm. Individual dimensions accordingrequirements
- the door system without hose ports meets the requirements of MSC, 1/Circ, 1273/1319 and can therefore be designed with extended opening dimension.; max. CO: 1173; CH 2415mm but the area of the leaf must not exceed approx. 2,36m²

CAD-System:			Tolerance			Scale: 1:5	Weight
						Name and No. of Typ: LL-D4-A60	
08				Date	Name	Title: A-60 Door with VX hinge	
07			Draw	305.01.18	FAH		
06			Checked	XX.XX.XX	XXXXXX		
05			Stand	XX.XX.XX	XXXXXX		
04							
03							
02			LETHE Interior outfitting Insulation			Drawing No.: LL-D4-A60 Overview	
01							
Index	Revision	Date	Name			Repl. for	Repl. by