Detail A

1:2

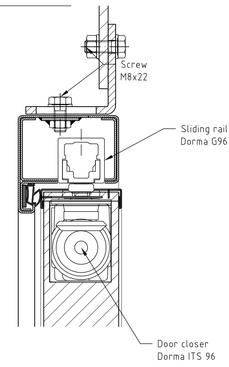

Front view

1:5

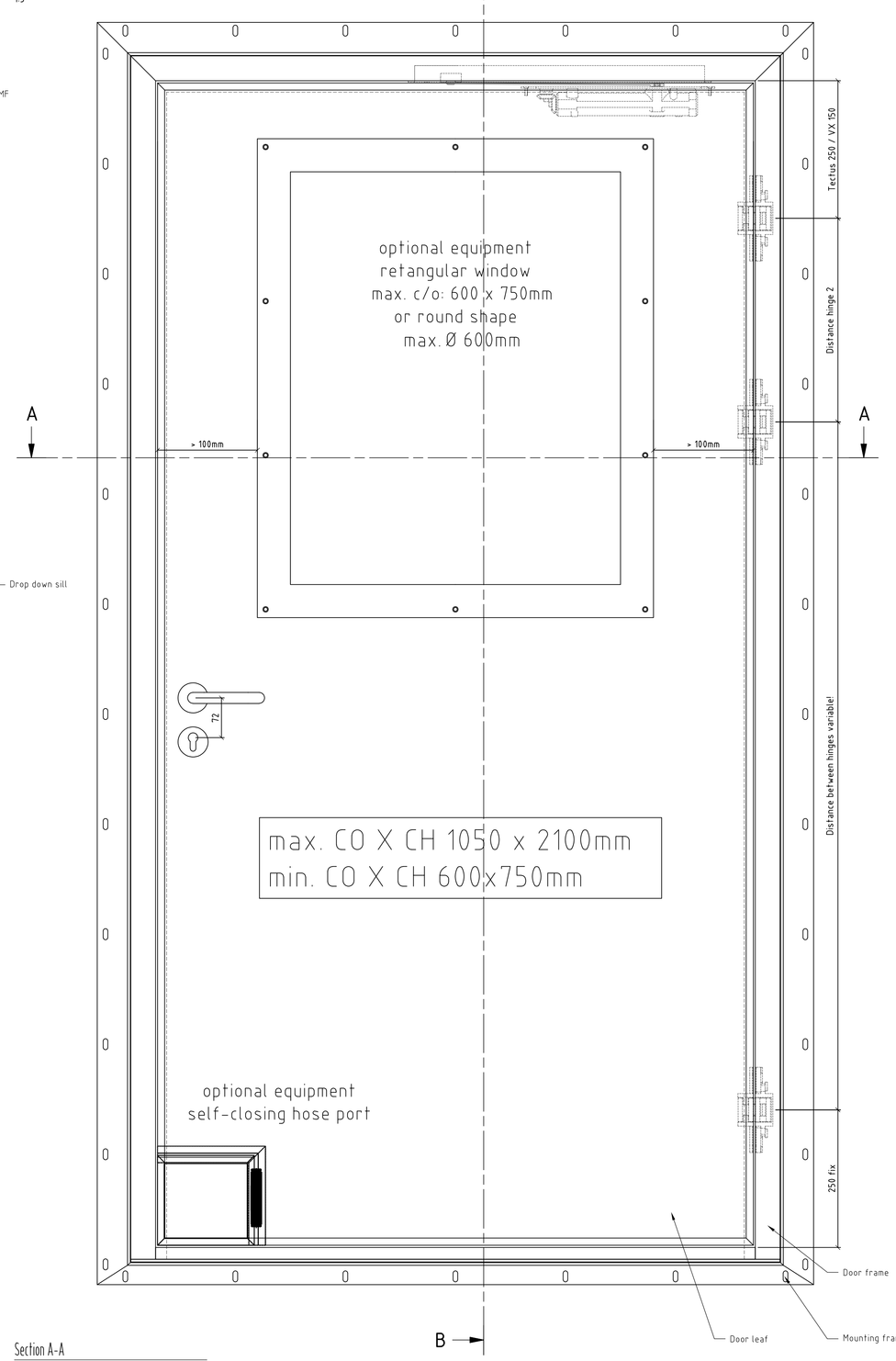

Sectiont B-B

1:5

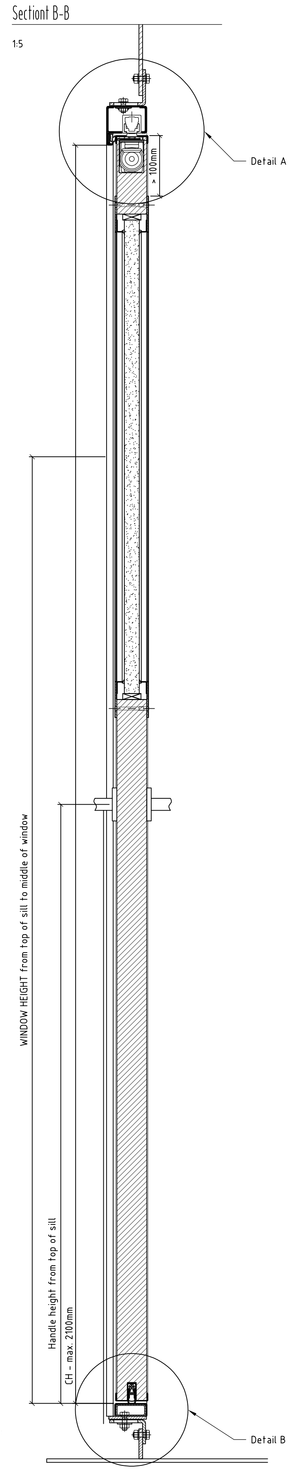

Detail B

Sill type A

1:2

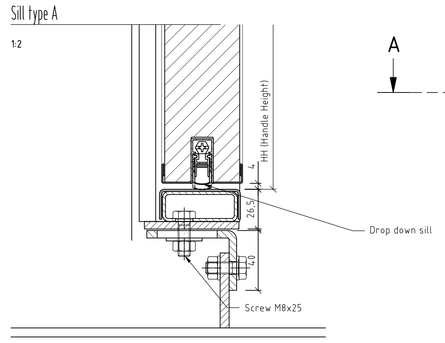

Sill type B

1:2

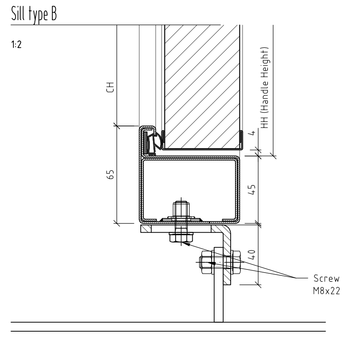

Sill type C

1:2

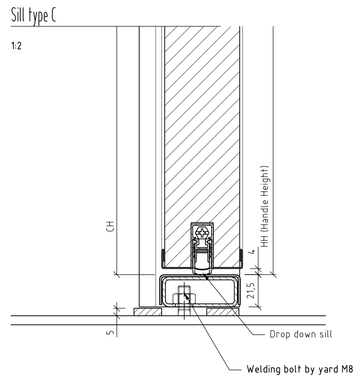

Section A-A

1:5

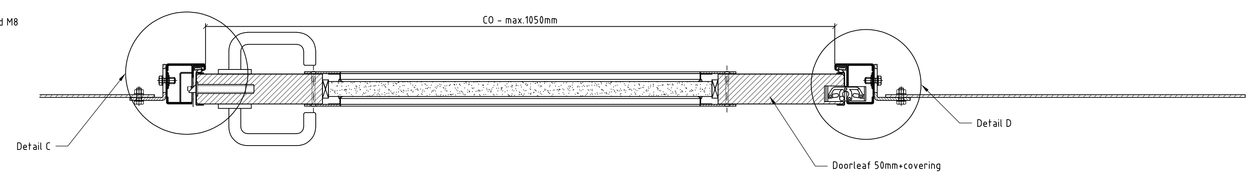

Hose port

1:2

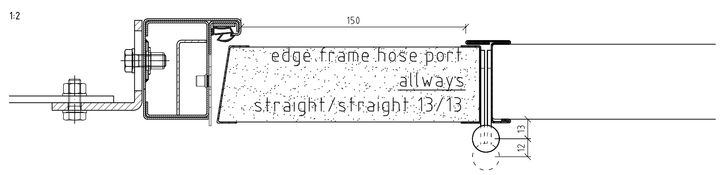

Detail C

1:2

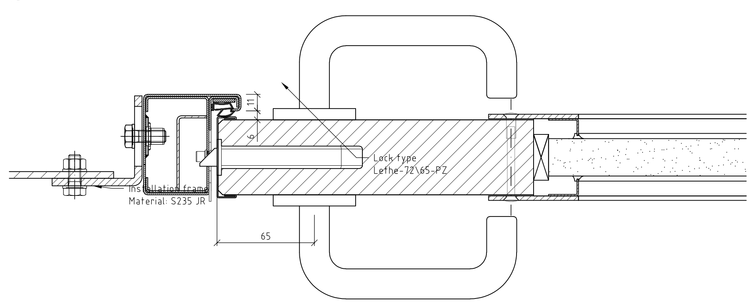

Detail D

1:2

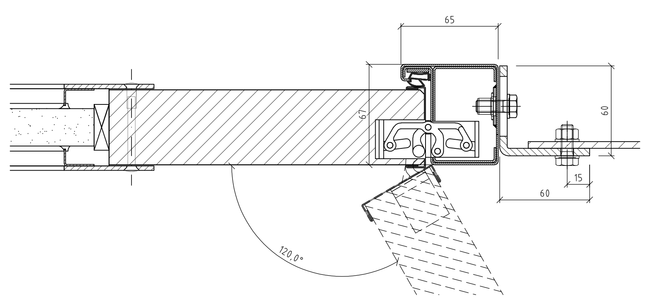

View with Tectus TE526

always specity the hinge type when ordering!

Hinge type TECTUS concealed

1:2

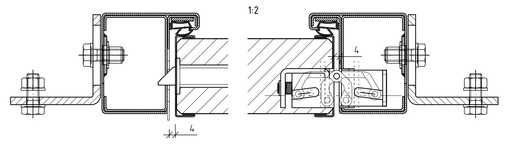

Hinge type TECTUS extended

1:2

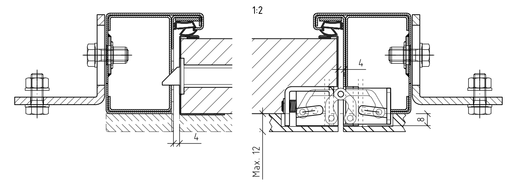

Reduction from CO by 90°door open

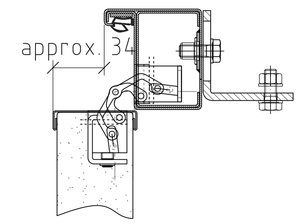

TECTUS concealed

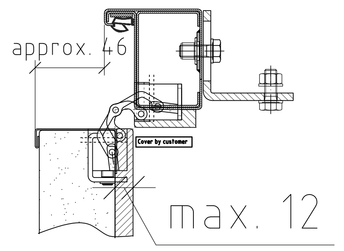

TECTUS extended

Top view Detail edge frame

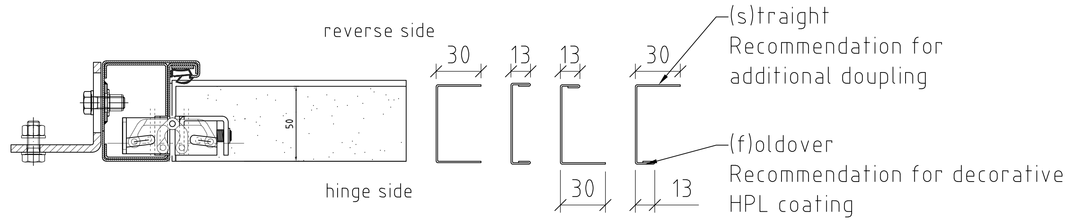

Please note following rules for distance of hinges type TECTUS 526				
Clear height	< 1500mm	1500mm-max		
Hinge Extension	---	No	Yes	
Area (CO×CH)	---	---	Area < 1,68m²	Area >= 1,68m²
Hinge distance 1	250mm	250mm	250mm	250mm
Hinge distance 2	not applicable	370mm	370mm	370mm
Distance between hinges	variable	variable	variable	variable
Hinge distance 3	250 (fix from sill)	250 (fix from sill)	250 (fix from sill)	370
Hinge distance 4 (only if TECTUS extended & Area >= 1,68m²)	---	---	---	250 (fix from sill)
	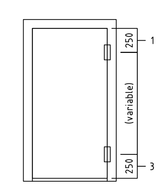	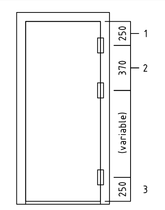	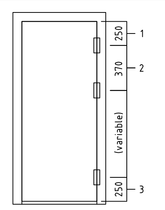	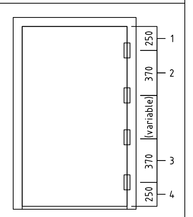

Please note that…:

- …Noise reduction values for all systems were measured under test conditions. Final values depending on room and installation conditions
- …further design and technical details to be informed before start of production
- …the production process requires a list with all relevant product properties
- …price and amount of items might be modified after receiving further information
- …installation or coordination drawings are not part of the offer
- …handle and cylinder are not covered by this offer
- …manufacturing aberrations from specified colour types could appear due to material background or charge reasons and are no claim reason
- …weights attached to the described products shall not exceed a maximum weight of 30kg/leaf.
- ...clear opening (dimension in door frame, reduction by opened door not taken into account) with a maximum of COxCH 1050x2100mm. Individual dimensions accordingrequirements

All dimensions must be checked on the workpiece.

CAD-System:	Tolerance	Scale: 1:5 / 1:2	Weight
General note: Subject to change without notice.		Name and No. of Typ: LYD-3plus-A60	
Draw: 2026-04-02 FAH		Title: A-60 Door with Tectus TE526	
Checked			
Stand			
LETHE interior outfitting insulation		Drawing No.: 2026 LYD-3plus-A60	
Revision / Date / Name		Repl. for	Repl. by